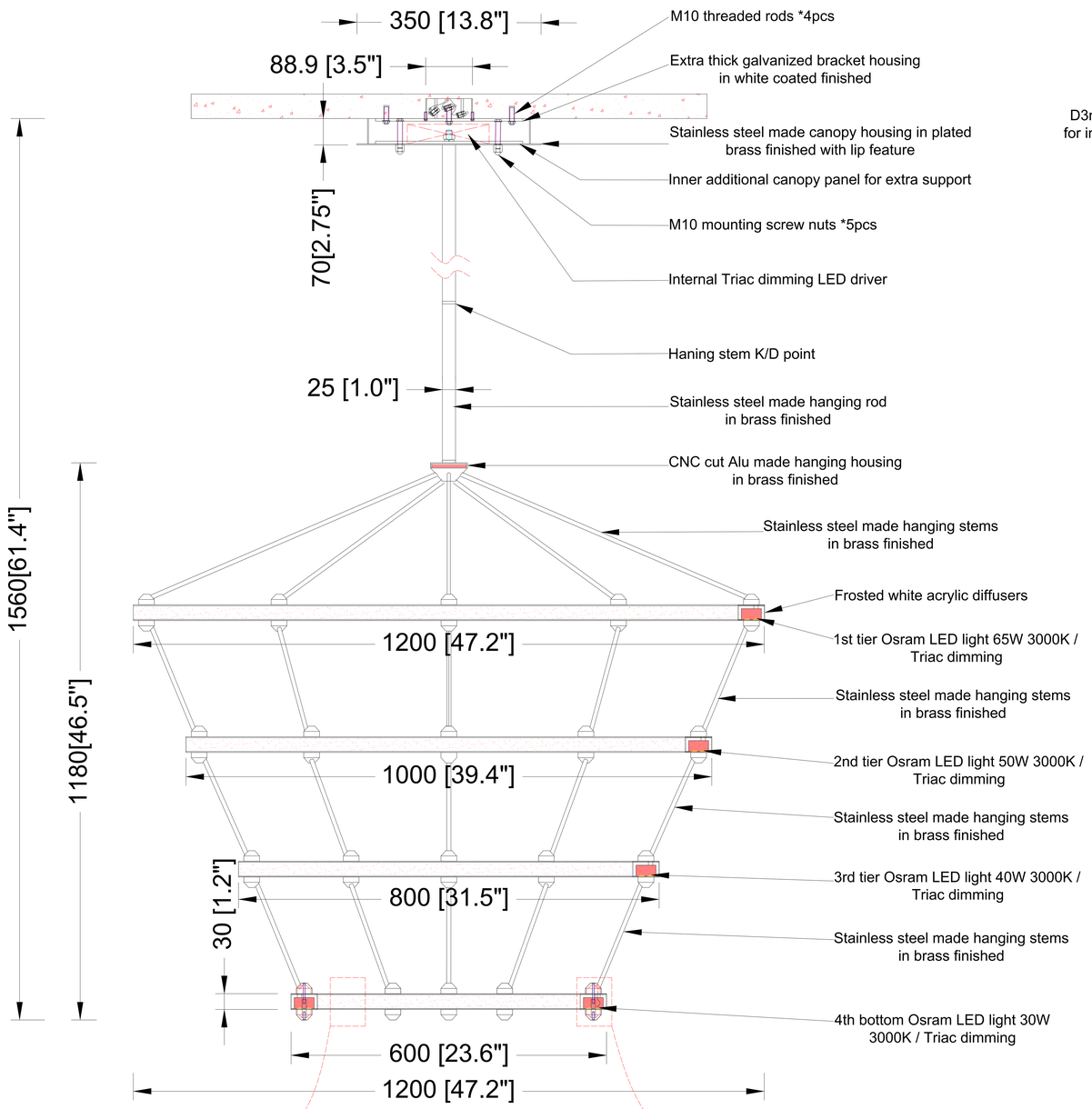

ELEVATION VIEW

SCALE: 1:15

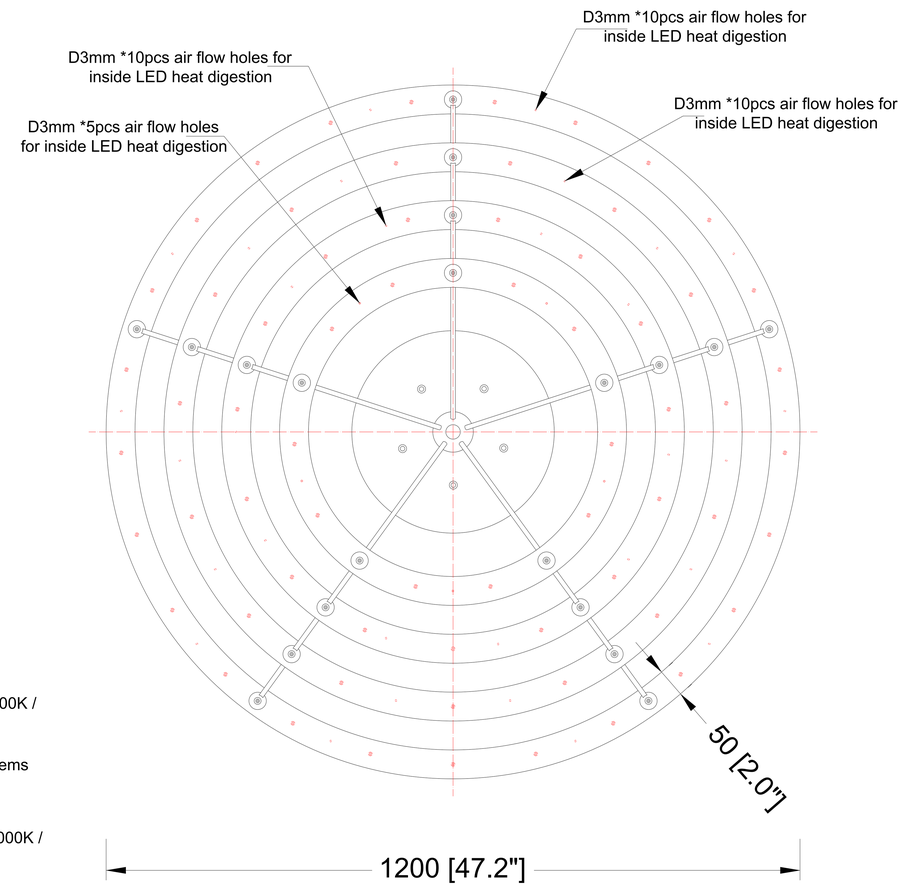

BOTTOM VIEW

SCALE: 1:15

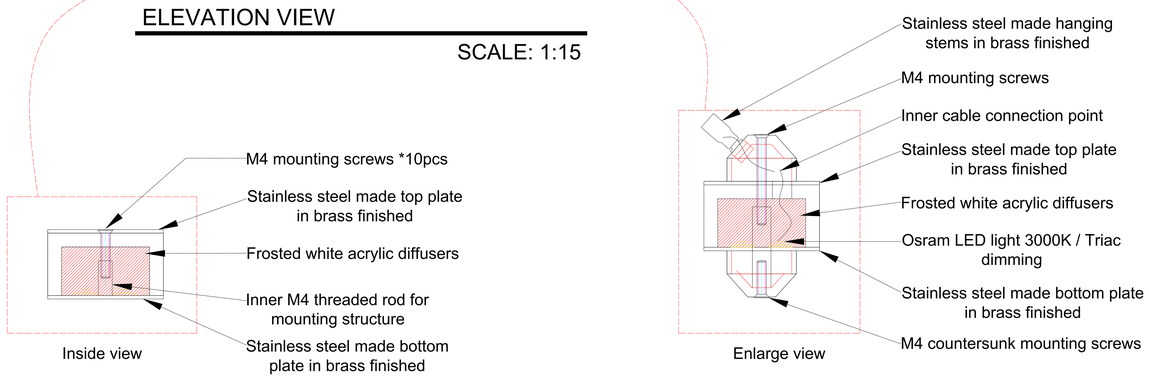

Ref Pic

SCALE: NTS

REEF LIGHTING
WHERE LIGHT TOUCHES THE SEA

PROJECT:

PO 5356

±8MM
Size tolerance
± 1/2°
Angle tolerance

Date: 15-08-2025

Revision:

Type: Pendant lamp

Item No: 9660 - Brass + White

Dwg by:

Verification by:

Scale: 1: 15

Area/Location:

Dimension: 47.2"L x 47.2"W x 61.4"H / Canopy 13.8"dia x 2.75"H

Finish: Brass housing + Frosted white acrylic

Materials: Stainless steel + Alu + Acrylic

Weight: 60 kgs

Light:
Integrated LED light 185W 3000K / Triac dimming

Qty: 3 pcs

☐ Approved

☐ Approved as noted

☐ Revise & resubmit

Date: _____

Signature: _____

Notes:

c UL us LISTED

Reef Lighting, Inc. reserves the right to change or modify the product specifications without notification.